MMFTN303K

N-Channel Enhancement Mode MOSFET

Features

- Surface-mounted package
- Built-in G-S Protection Diode
- Typical ESD Protection HBM Class 2

Classification	Voltage Range(V)
0A	< 125
0B	125 to < 250
1A	250 to < 500
1B	500 to < 1000
1C	1000 to < 2000
2	2000 to < 4000
3A	4000 to < 8000
3B	≥ 8000

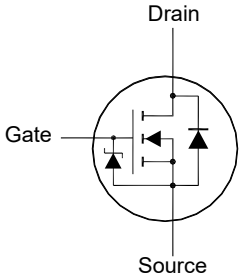

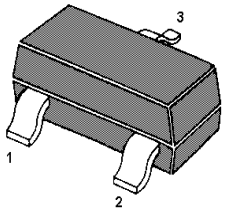

1. Gate 2. Source 3. Drain
SOT-23 Plastic Package

Applications

- Portable appliances
- Battery management

Absolute Maximum Ratings(at T_a = 25℃ unless otherwise specified)

Parameter	Symbol	Value	Unit
Drain-Source Voltage	V_{DS}	25	V
Gate-Source Voltage	V_{GS}	8	V
Drain Current	I_D	680	mA
Peak Drain Current, Pulsed [1)]	I_{DM}	2	A
Power Dissipation [2)]	P_D	350	mW
Operating Junction Temperature Range	T_j	- 55 to + 150	℃
Storage Temperature Range	T_{stg}	- 55 to + 150	℃

Thermal Characteristics

Parameter	Symbol	Max.	Unit
Thermal Resistance from Junction to Ambient [2)]	$R_{\theta JA}$	357	℃/W

[1)] Pulse Test: Pulse Width ≤ 100 μs, Duty Cycle ≤ 2%,Repetitive rating, pulse width limited by junction temperature $T_{J(MAX)}$=150°C.

[2)] Device mounted on FR-4 substrate PC board, 2oz copper, with 1-inch square copper plate in still air.

Dated: 05/07/2023 Z Rev:04

Characteristics at T_a = 25℃ unless otherwise specified

Parameter	Symbol	Min.	Typ.	Max.	Unit
STATIC PARAMETERS					
Drain-Source Breakdown Voltage at I_D = 250 μA	$V_{(BR)DSS}$	25	-	-	V
Zero Gate Voltage Drain Current at V_{DS} = 20 V	I_{DSS}	-	-	1	μA
Gate-Source Leakage at V_{GS} = 8 V	I_{GSS}	-	-	100	nA
Gate-Source Threshold Voltage at V_{DS} = V_{GS}, I_D = 250 μA	$V_{GS(th)}$	0.5	-	1.5	V
Drain-Source On-State Resistance at V_{GS} = 4.5 V, I_D = 0.5 A at V_{GS} = 2.7 V, I_D = 0.2 A	$R_{DS(on)}$	- -	- -	450 600	mΩ
DYNAMIC PARAMETERS					
Forward Transconductance at V_{DS} = 5 V, I_D = 0.5 A	g_{FS}	-	3	-	S
Input Capacitance at V_{DS} = 10 V, V_{GS} = 0 V, f = 1 MHz	C_{iss}	-	812	-	pF
Output Capacitance at V_{DS} = 10 V, V_{GS} = 0 V, f = 1 MHz	C_{oss}	-	58	-	pF
Reverse Transfer Capacitance at V_{DS} = 10 V, V_{GS} = 0 V, f = 1 MHz	C_{rss}	-	30	-	pF
Total Gate Charge at V_{GS} = 4.5 V, V_{DD} = 10 V, I_D = 1 A at V_{GS} = 2.5 V, V_{DD} = 10 V, I_D = 1 A	Q_g	- -	8.6 5.2	- -	nC
Gate-Source Charge at V_{GS} = 4.5 V, V_{DD} = 10 V, I_D = 1 A	Q_{gs}	-	1.5	-	nC
Gate-Drain Charge at V_{GS} = 4.5 V, V_{DD} = 10 V, I_D = 1 A	Q_{gd}	-	3	-	nC
Turn-On Delay Time at V_{DD} = 10 V, I_D = 0.5 A, V_{GS} = 4.5 V, R_G = 51 Ω	$t_{d(on)}$	-	31	-	ns
Turn-On Rise Time at V_{DD} = 10 V, I_D = 0.5 A, V_{GS} = 4.5 V, R_G = 51 Ω	t_r	-	22	-	ns
Turn-Off Delay Time at V_{DD} = 10 V, I_D = 0.5 A, V_{GS} = 4.5 V, R_G = 51 Ω	$t_{d(off)}$	-	55	-	ns
Turn-Off Fall Time at V_{DD} = 10 V, I_D = 0.5 A, V_{GS} = 4.5 V, R_G = 51 Ω	t_f	-	20	-	ns
Body-Diode PARAMETERS					
Drain-Source Diode Forward Voltage at I_S = 0.5 A	V_{SD}	-	-	1.2	V
Body-Diode Continuous Current	I_S	-	-	680	mA

Electrical Characteristics Curves

Fig. 1 Typical Output Characteristics

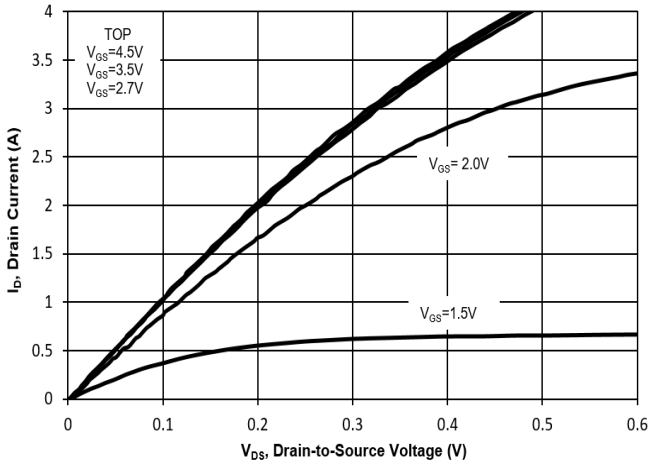

Fig. 2 Typical Transfer Characteristics

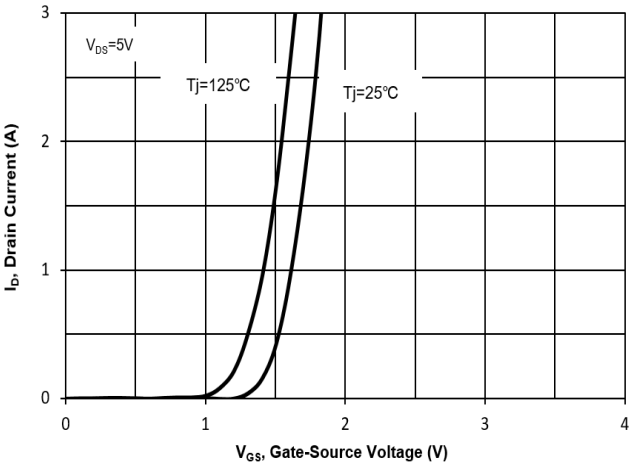

Fig. 3 on-Resistance vs. Drain Current

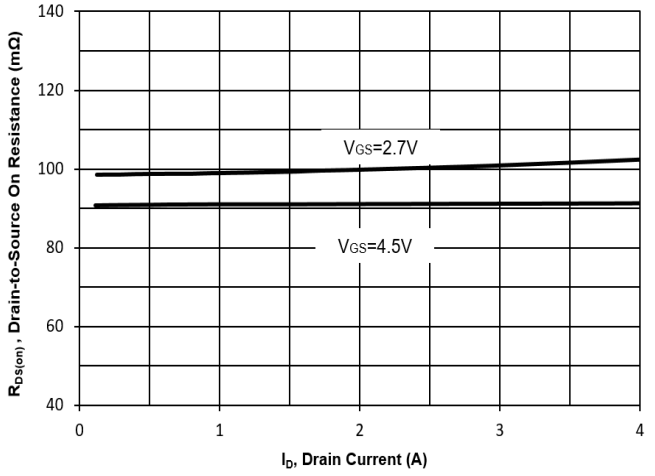

Fig. 4 on-Resistance vs. Gate-Source Voltage

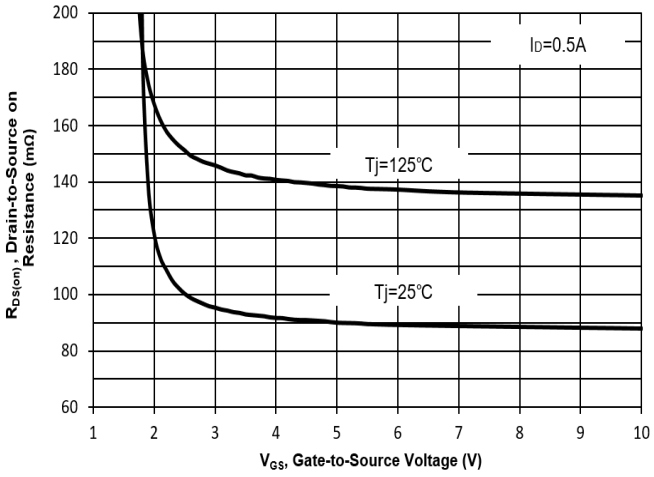

Fig. 5 on-Resistance vs.T_j

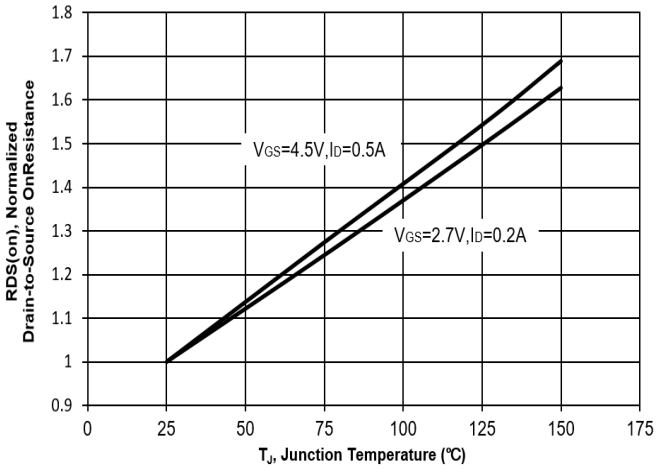

Fig. 6 Typical Forward Characteristics

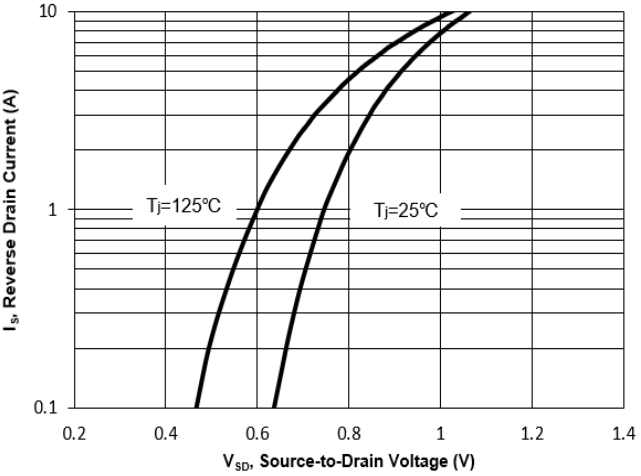

Electrical Characteristics Curves

Fig. 7 Typical Junction Capacitance

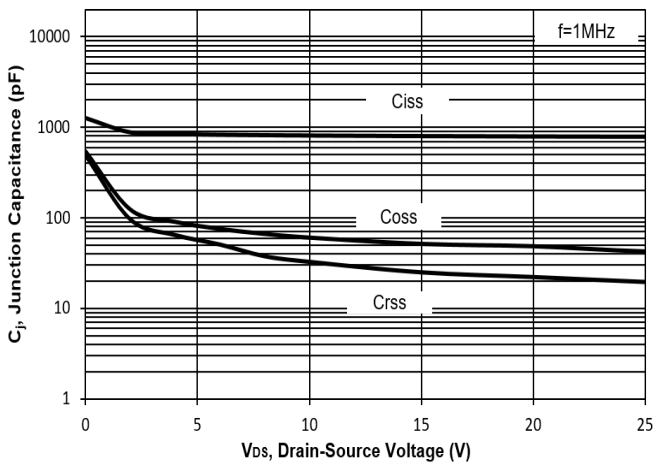

Fig. 8 Drain-Source Leakage Current vs. T_j

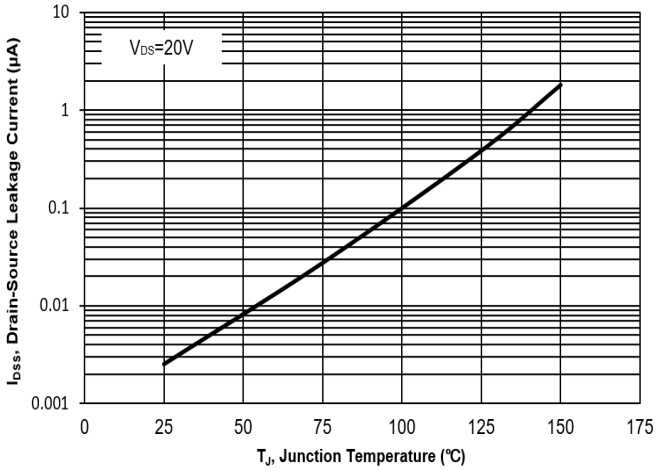

Fig. 9 $V_{(BR)DSS}$ vs. Junction Temperature

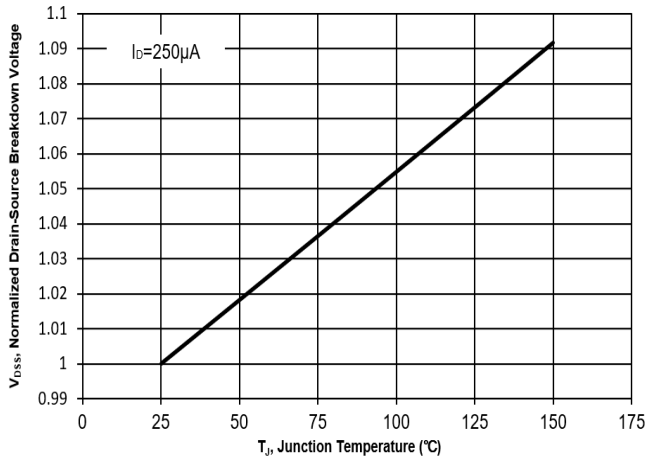

Fig. 10 Gate Threshold Variation vs. T_j

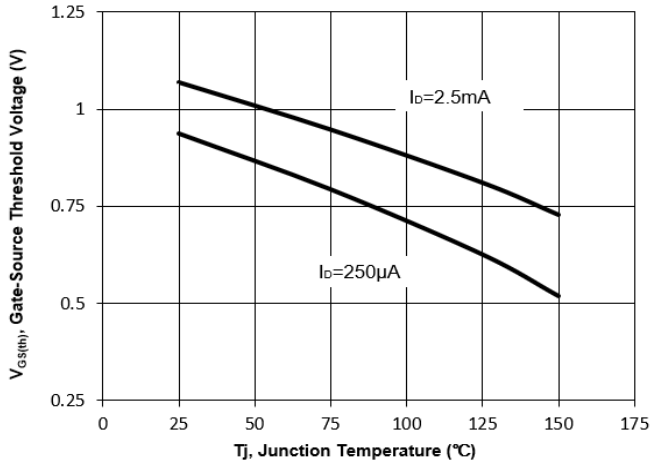

Fig. 11 Gate Charge

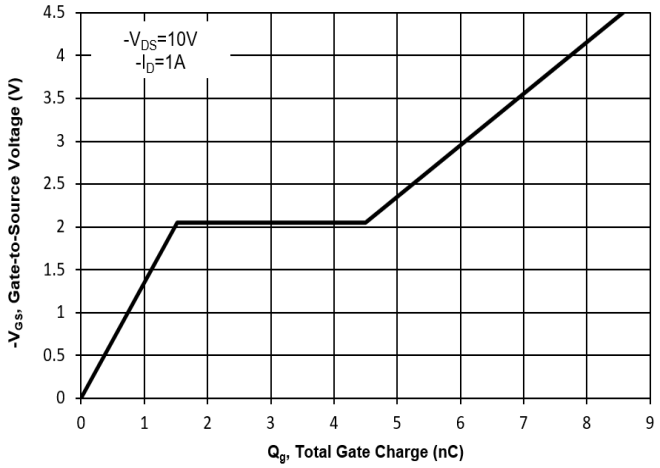

Test Circuits

Fig.1-1 Switching times test circuit

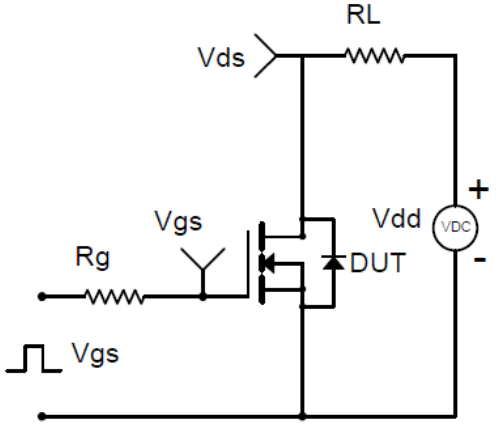

Fig.1-2 Switching Waveform

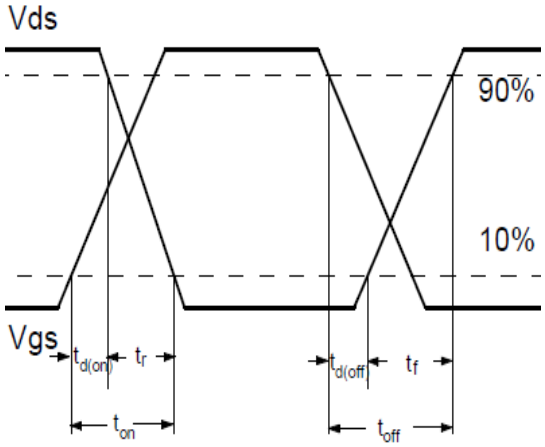

Fig.2-1 Gate charge test circuit

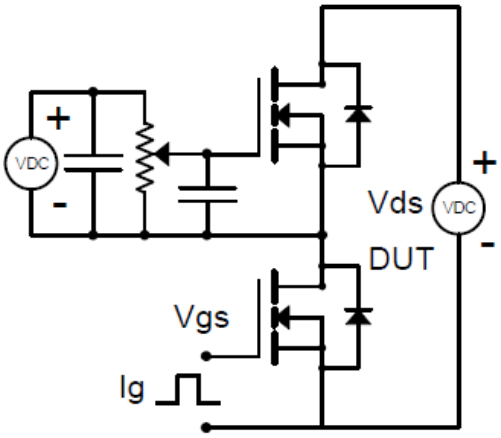

Fig.2-2 Gate charge waveform

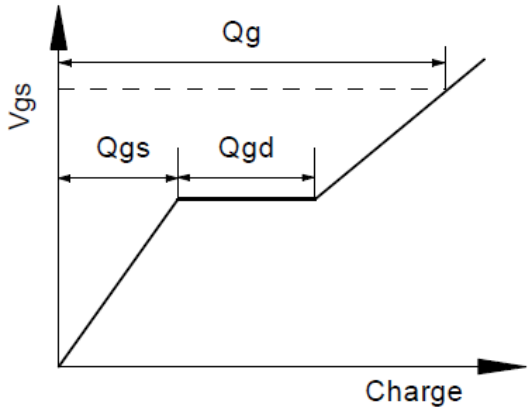

Package Outline (Dimensions in mm) SOT-23

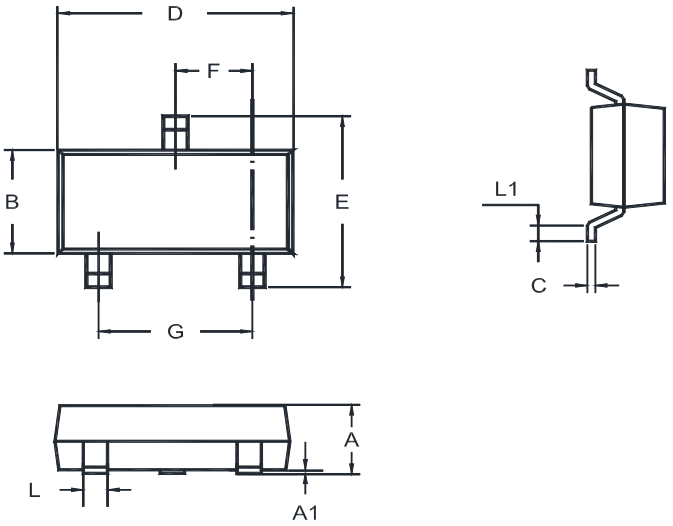

Unit	A	A1	B	C	D	E	F	G	L	L1
mm	1.20 0.89	0.100 0.013	1.40 1.20	0.19 0.08	3.04 2.80	2.6 2.2	1.02 0.89	2.04 1.78	0.51 0.37	0.2 MIN

Recommended Soldering Footprint

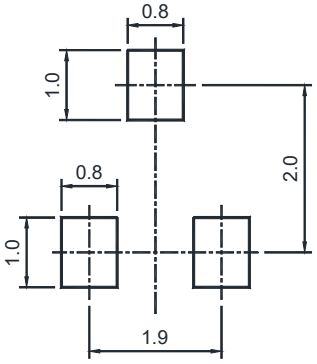

Packing information

Package	Tape Width (mm)	Pitch		Reel Size		Per Reel Packing Quantity
		mm	inch	mm	inch	
SOT-23	8	4 ± 0.1	0.157 ± 0.004	178	7	3,000

Marking information

" MV " = Part No.

" YM " = Date Code Marking

" Y " = Year

" M " = Month

Font type: Arial

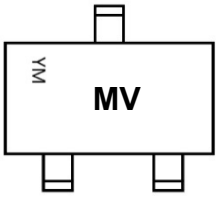

Dated: 05/07/2023 Z Rev:04