MMBTA14W

NPN Silicon Epitaxial Planar Darlington Transistors

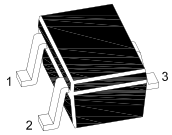

1.Base 2.Emitter 3.Collector
SOT-323 Plastic Package

Applications

• For general purpose applications, darlington transistor

Absolute Maximum Ratings (T_a = 25℃)

Parameter	Symbol	Value	Unit
Collector Emitter Voltage	V_{CES}	30	V
Collector Base Voltage	V_{CBO}	30	V
Emitter Base Voltage	V_{EBO}	10	V
Collector Current	I_C	500	mA
Power Dissipation	P_{tot}	200	mW
Junction Temperature	T_j	150	℃
Storage Temperature Range	T_{Stg}	-55 to +150	℃

Thermal Characteristics

Parameter	Symbol	Max.	Unit
Thermal Resistance from Junction to Ambient [1)]	$R_{\theta JA}$	625	℃/W

[1)] Device mounted on FR-4 substrate PC board, 2oz copper, with minimum recommended pad layout.

Dated : 21/02/2023 Rev: 03

Characteristics at T_{amb} = 25℃

Parameter	Symbol	Min.	Max.	Unit
DC Current Gain at V_{CE} = 5 V, I_C = 10 mA at V_{CE} = 5 V, I_C = 100 mA	 h_{FE} h_{FE}	 10000 20000	 - -	 - -
Collector Emitter Breakdown Voltage at I_C = 100 μA	$V_{(BR)CES}$	30	-	V
Collector Base Breakdown Voltage at I_C = 100 μA	$V_{(BR)CBO}$	30	-	V
Emitter Base Breakdown Voltage at I_E = 100 μA	$V_{(BR)EBO}$	10	-	V
Collector Cutoff Current at V_{CB} = 30 V	I_{CBO}	-	100	nA
Emitter Cutoff Current at V_{EB} = 10 V	I_{EBO}	-	100	nA
Collector Emitter Saturation Voltage at I_C = 100 mA, I_B = 0.1 mA	$V_{CE\ (sat)}$	-	1.5	V
Base Emitter Saturation Voltage at I_C = 100 mA, I_B = 0.1 mA	V_{BEsat}	-	2	V
Base Emitter On Voltage at I_C = 100 mA, V_{CE} = 5 V	$V_{BE(on)}$	-	2	V
Current Gain Bandwidth Product at V_{CE} = 5 V, I_C = 10 mA, f = 100 MHz	f_T	125	-	MHz

Electrical Characteristics Curves

Fig. 1 Collector Current vs. Base Emitter Voltage

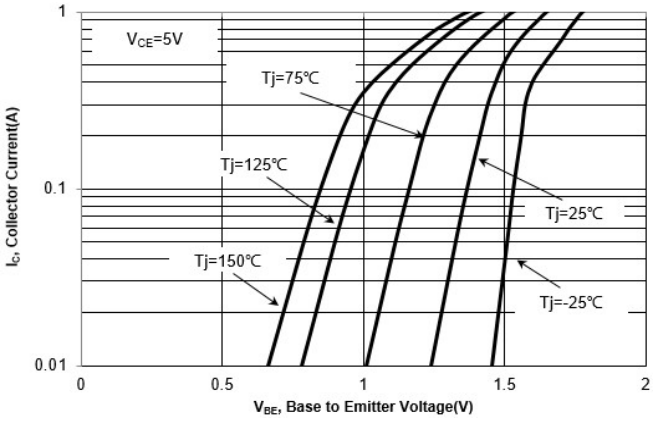

Fig. 2 DC Current Gain vs. Collector Current

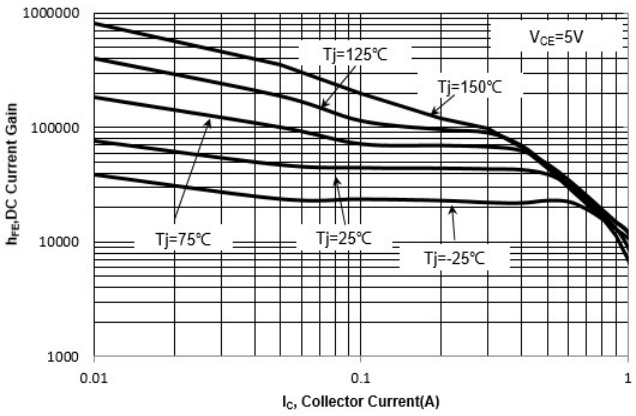

Fig. 3 V_{BESAT} vs. Collector Current

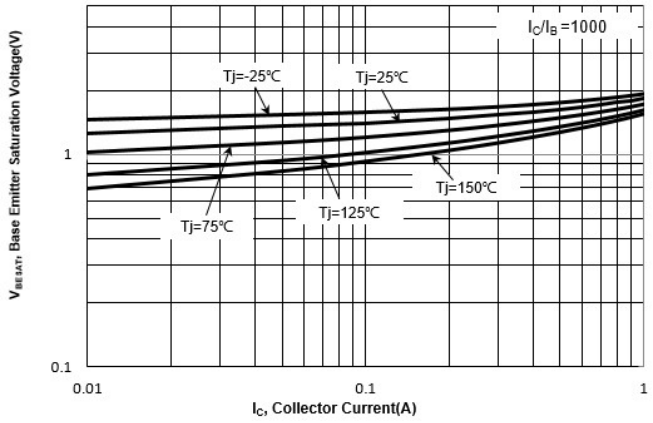

Fig. 4 V_{CESAT} vs. Collector Current

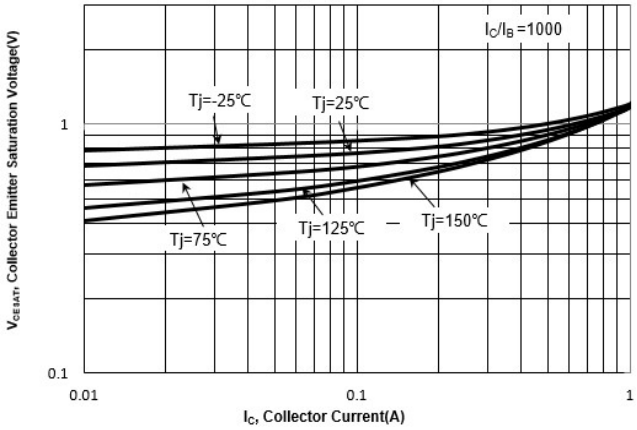

Fig. 5 Output Capacitance

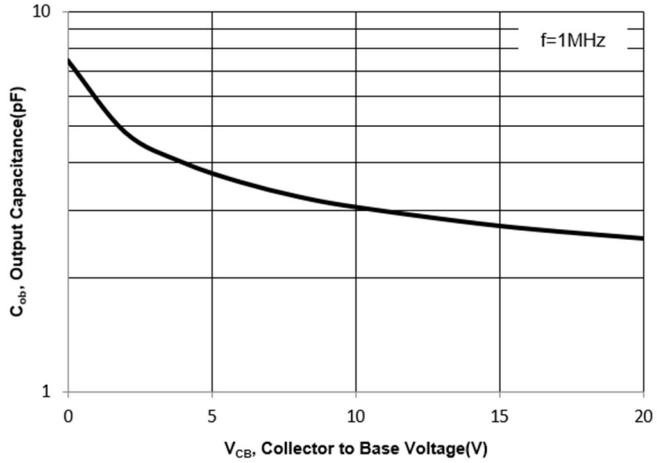

Fig. 6 Power Derating Curve

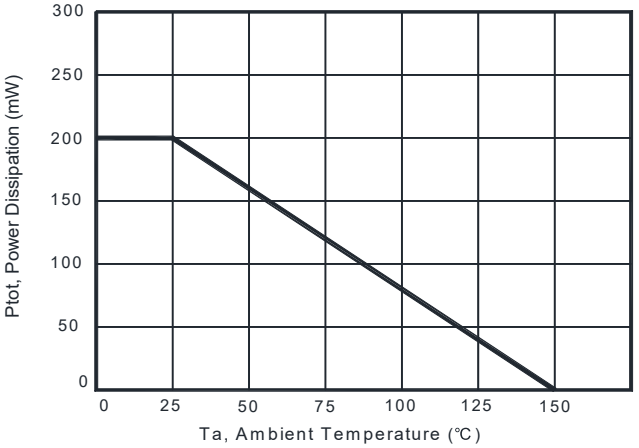

Package Outline Dimensions (Units: mm) SOT-323

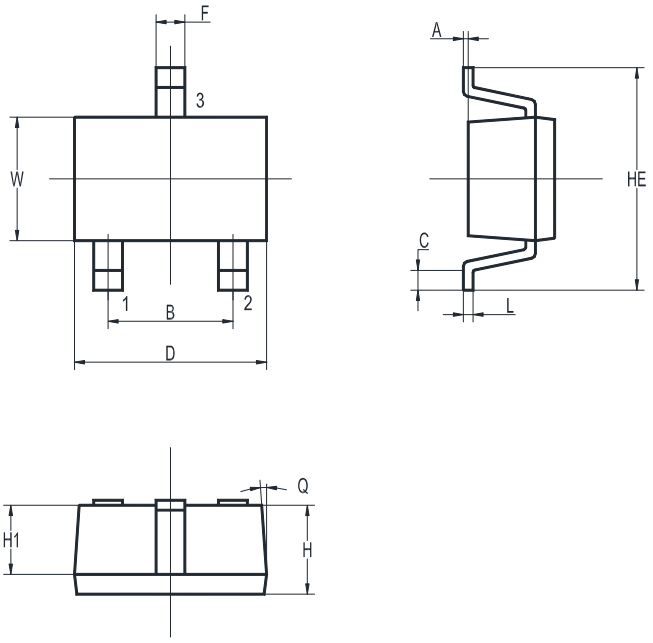

UNIT	A	B	C	D	H	H1	HE	F	L	W	Q
mm	0.1 MAX.	1.4 1.2	0.2 MIN.	2.1 1.9	1.0 0.8	0.7 TYP.	2.4 2.0	0.35 0.25	0.15 0.05	1.35 1.15	5° MAX.

Recommended Soldering Footprint

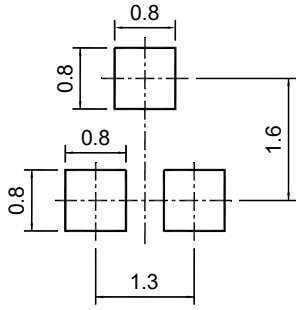

Packing information

Package	Tape Width (mm)	Pitch		Reel Size		Per Reel Packing Quantity
		mm	inch	mm	inch	
SOT-323	8	4 ± 0.1	0.157 ± 0.004	178	7	3,000

Marking information

" 5H " = Part No.

" YM " = Date Code Marking

" Y " = Year

" M " = Month
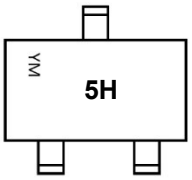
Font type: Arial