MKA02N028U

N-Channel Enhancement Mode MOSFET

Features

• Advanced trench process technology

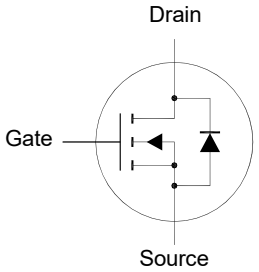

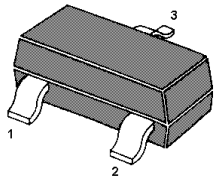

1. Gate 2. Source 3. Drain
SOT-23 Plastic Package

Application

• Portable appliances
• Battery management

Absolute Maximum Ratings(at T_a = 25℃ unless otherwise specified)

Parameter	Symbol	Value	Unit
Drain-Source Voltage	V_{DSS}	20	V
Drain-Gate Voltage	V_{GS}	± 12	V
Drain Current - Continuous	I_D	4.2	A
Drain Current - Pulsed [1)]	I_{DM}	24	A
Power Dissipation [2)]	P_D	1	W
Operating Junction and Storage Temperature Range	T_j, T_{stg}	- 55 to + 150	℃

Thermal Characteristics

Parameter	Symbol	Max.	Unit
Thermal Resistance from Junction to Ambient [2)]	$R_{\theta JA}$	125	℃/W

[1)] Pulse Test: Pulse Width ≤ 100 μs, Duty Cycle ≤ 2%,Repetitive rating, pulse width limited by $T_{J(MAX)}$.
[2)] Device mounted on FR-4 substrate PC board, 2oz copper, with 1-inch square copper plate.

®

Dated: 11/04/2022 Rev:03

Characteristics at T_a = 25℃ unless otherwise specified

Parameter	Symbol	Min.	Typ.	Max.	Unit
STATIC PARAMETERS					
Drain-Source Breakdown Voltage at I_D = 250 μA	$V_{(BR)DSS}$	20	-	-	V
Drain-Source Leakage Current at V_{DS} = 20 V	I_{DSS}	-	-	1	μA
Gate-Source Leakage Current at V_{GS} = ± 12 V	I_{GSS}	-	-	± 100	nA
Gate-Source Threshold Voltage at V_{GS} = V_{DS}, I_D = 250 μA	$V_{GS(th)}$	0.4	-	1.2	V
Drain-Source On-State Resistance at V_{GS} = 2.5 V, I_D = 3 A at V_{GS} = 4.5 V, I_D = 4.2 A	$R_{DS(on)}$	- -	- 28	50 40	mΩ
DYNAMIC PARAMETERS					
Gate Resistance at V_{DS} = 0 V, V_{GS} = 0 V, f = 1 MHz	R_g	-	2.5	-	Ω
Input Capacitance at V_{DS} = 10 V, V_{GS} = 0 V, f = 1 MHz	C_{iss}	-	481	-	pF
Output Capacitance at V_{DS} = 10 V, V_{GS} = 0 V, f = 1 MHz	C_{oss}	-	85	-	pF
Reverse Transfer Capacitance at V_{DS} = 10 V, V_{GS} = 0 V, f = 1 MHz	C_{rss}	-	63	-	pF
Total Gate Charge at V_{DS} = 10 V, I_D = 1 A, V_{GS} = 4.5 V	Q_g	-	7.6	-	nC
Gate Source Charge at V_{DS} = 10 V, I_D = 1 A, V_{GS} = 4.5 V	Q_{gs}	-	1.3	-	nC
Gate Drain Charge at V_{DS} = 10 V, I_D = 1 A, V_{GS} = 4.5 V	Q_{gd}	-	2	-	nC
Turn-On Delay Time at V_{DD} = 10 V, I_D = 1 A, V_{GS} = 4.5 V, R_G = 4.7 Ω	$t_{d(on)}$	-	11.3	-	ns
Turn-On Rise Time at V_{DD} = 10 V, I_D = 1 A, V_{GS} = 4.5 V, R_G = 4.7 Ω	t_r	-	5.4	-	ns
Turn-Off Delay Time at V_{DD} = 10 V, I_D = 1 A, V_{GS} = 4.5 V, R_G = 4.7 Ω	$t_{d(off)}$	-	14	-	ns
Turn-Off Fall Time at V_{DD} = 10 V, I_D = 1 A, V_{GS} = 4.5 V, R_G = 4.7 Ω	t_f	-	2.9	-	ns
Drain-Source Diode Characteristics					
Drain-Source Diode Forward Voltage at V_{GS} = 0 V, I_S = 1 A	V_{SD}	-	-	1.2	V
Body-Diode Continuous Current	I_S	-	-	4.2	A
Body Diode Reverse Recovery Time at I_S = 1 A, di/dt = 100 A / μs	t_{rr}	-	7.4	-	ns
Body Diode Reverse Recovery Charge at I_S = 1 A, di/dt = 100 A / μs	Q_{rr}	-	2	-	nc

®

Electrical Characteristics Curves

Fig. 1 Typical Output Characteristics

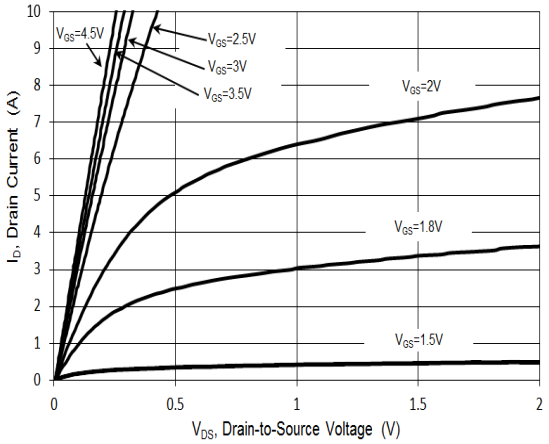

Fig. 2 Typical Transfer Characteristics

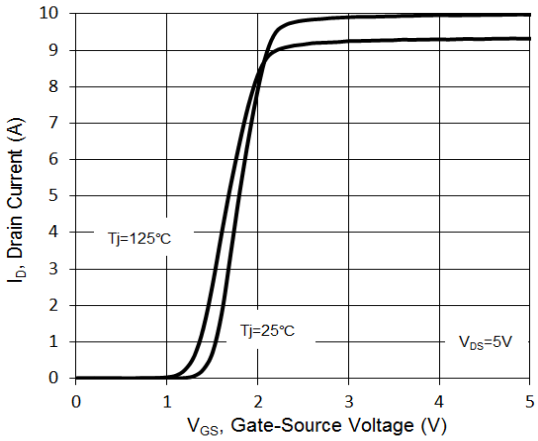

Fig. 3 Gate-Source Voltage vs.$R_{DS(on)}$

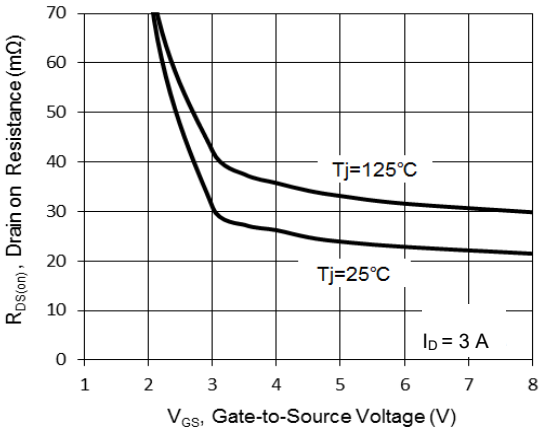

Fig. 4 on-Resistance vs.T_j

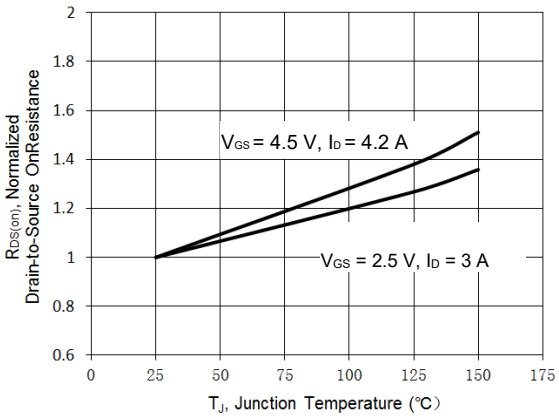

Fig. 5 on-Resistance vs. Drain Current

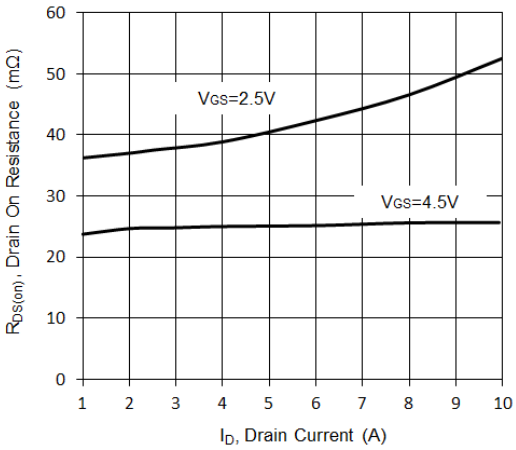

Fig. 6 Forward Characteristics

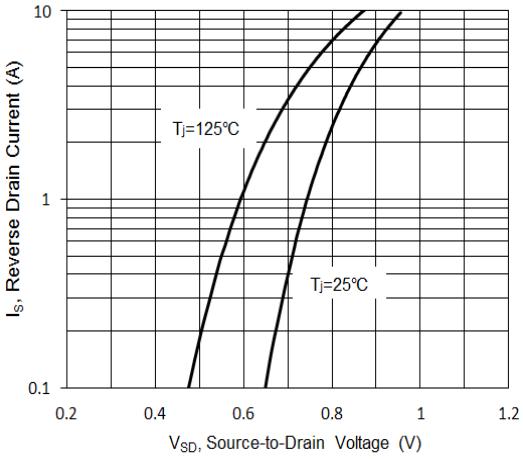

Electrical Characteristics Curves

Fig. 7 Junction Capacitance

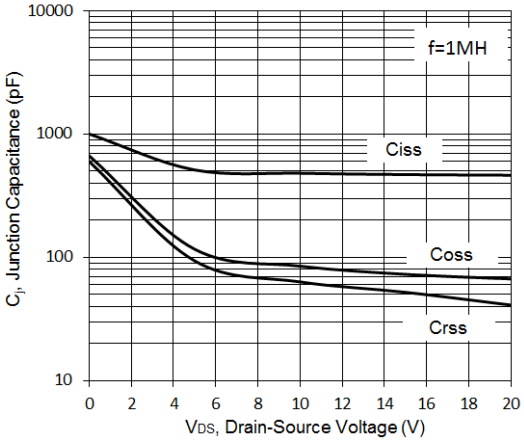

Fig. 8 Gate Charge

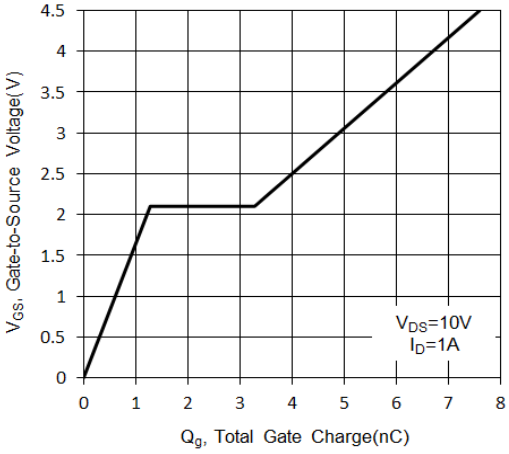

Fig. 9 Gate Threshold Variation vs. T_j

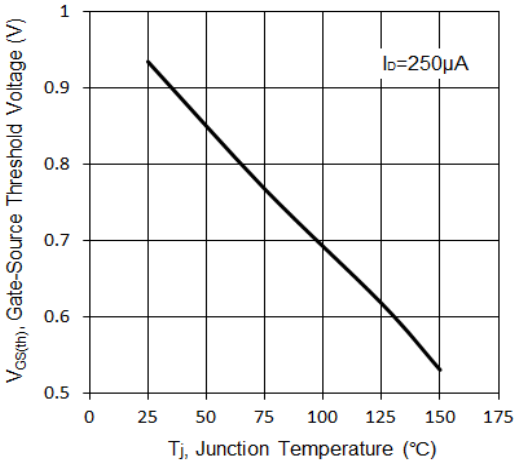

Fig. 10 Drain Leakage Current vs. T_j

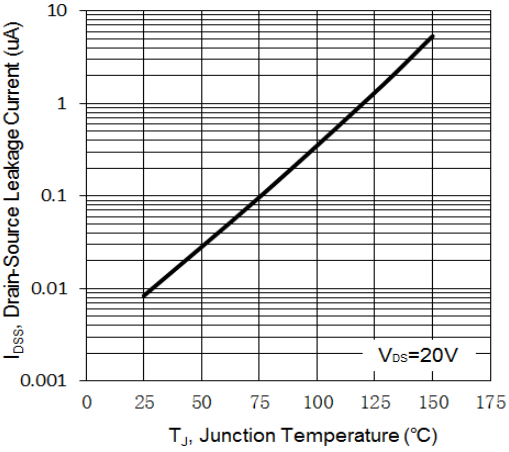

Fig.11 B_{VDSS} vs. Temperature

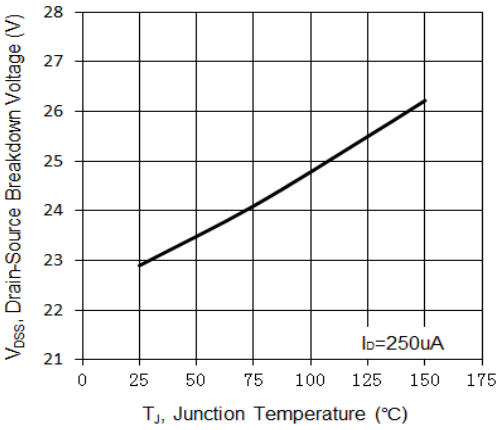

®

Test Circuits

Fig.1-1 Switching times test circuit

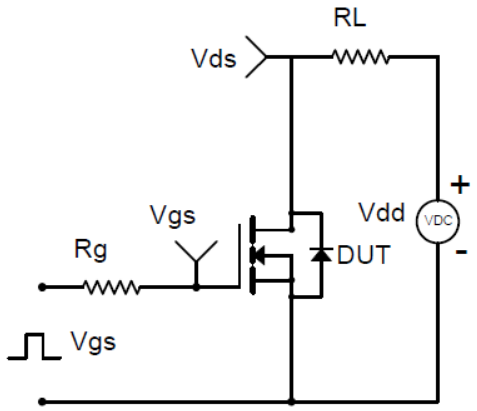

Fig.1-2 Switching Waveform

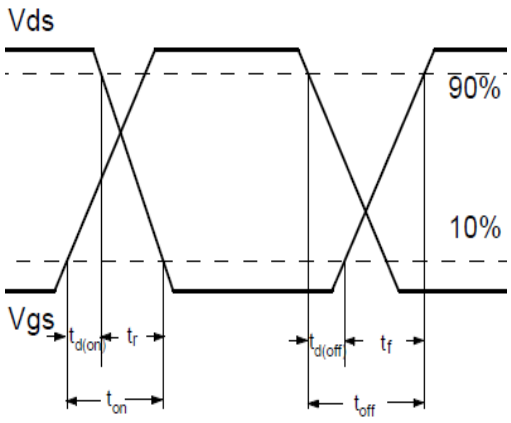

Fig.2-1 Gate charge test circuit

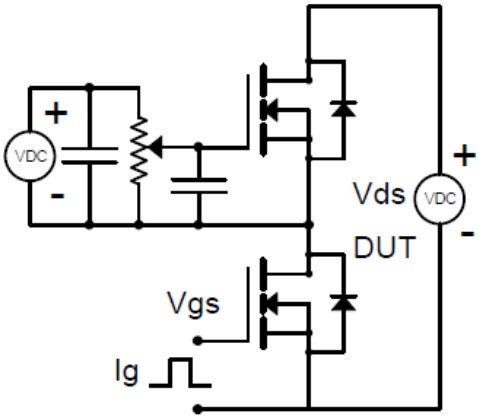

Fig.2-2 Gate charge waveform

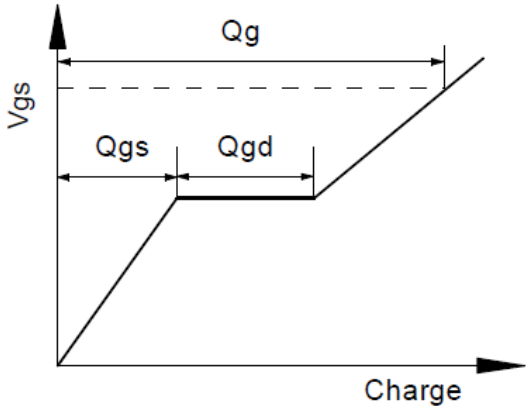

Package Outline (Dimensions in mm) SOT-23

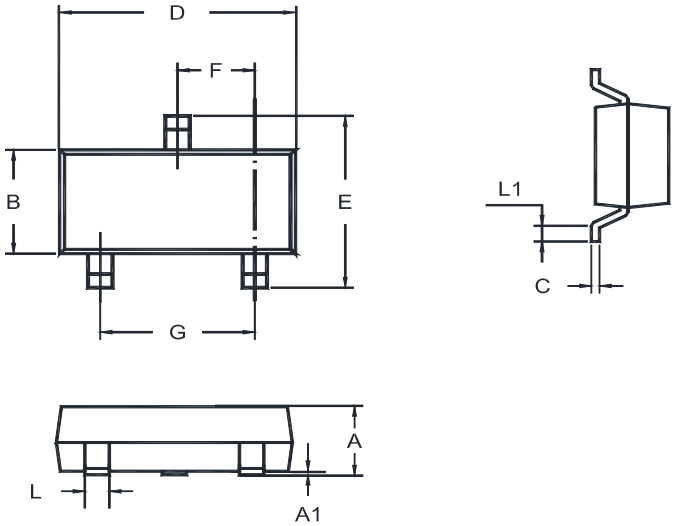

Unit	A	A1	B	C	D	E	F	G	L	L1
mm	1.20 0.89	0.100 0.013	1.40 1.20	0.19 0.08	3.04 2.80	2.6 2.2	1.02 0.89	2.04 1.78	0.51 0.37	0.2 MIN

Recommended Soldering Footprint

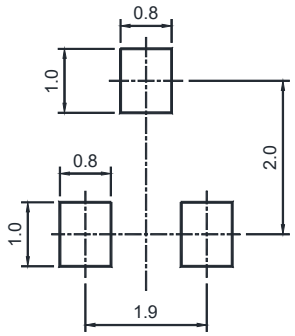

Packing information

Package	Tape Width (mm)	Pitch		Reel Size		Per Reel Packing Quantity
		mm	inch	mm	inch	
SOT-23	8	4 ± 0.1	0.157 ± 0.004	178	7	3,000

Marking information

" M25 " = Part No.
"YM" = Date Code Marking
"Y" = Year
"M" = Month
Font type: Arial