2N6427

NPN Silicon Epitaxial Planar Darlington Transistor

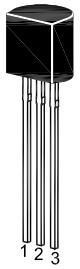

1. Emitter 2. Base 3. Collector
TO-92 Plastic Package

Absolute Maximum Ratings (T_a = 25℃)

Parameter	Symbol	Value	Unit
Collector Base Voltage	V_{CBO}	40	V
Collector Emitter Voltage	V_{CEO}	40	V
Emitter Base Voltage	V_{EBO}	12	V
Collector Current	I_C	0.5	A
Peak Collector Current	I_{CM}	1	A
Power Dissipation	P_{tot}	625	mW
Junction Temperature	T_j	150	℃
Storage Temperature Range	T_{stg}	- 55 to + 150	℃

Thermal Characteristics

Parameter	Symbol	Max.	Unit
Thermal Resistance from Junction Ambient	$R_{\theta JA}$	200	℃/W

Dated: 20/06/2023 Rev: 02

Characteristics at T_a = 25℃

Parameter	Symbol	Min.	Max.	Unit
DC Current Gain at V_{CE} = 5 V, I_C = 10 mA at V_{CE} = 5 V, I_C = 100 mA at V_{CE} = 5 V, I_C = 500 mA	 h_{FE} h_{FE} h_{FE}	 10000 20000 14000	 100000 200000 140000	 - - -
Collector Base Cutoff Current at V_{CB} = 30 V	I_{CBO}	-	50	nA
Collector Emitter Cutoff Current at V_{CE} = 25 V	I_{CES}	-	1	µA
Emitter Base Cutoff Current at V_{EB} = 10 V	I_{EBO}	-	50	nA
Collector Base Breakdown Voltage at I_C = 100 µA	$V_{(BR)CBO}$	40	-	V
Collector Emitter Breakdown Voltage at I_C = 10 mA	$V_{(BR)CEO}$	40	-	V
Emitter Base Breakdown Voltage at I_E = 10 µA	$V_{(BR)EBO}$	12	-	V
Collector Emitter Saturation Voltage at I_C = 50 mA, I_B = 0.5 mA at I_C = 500 mA, I_B = 0.5 mA	$V_{CE(sat)}$	- -	1.2 1.5	V
Base Emitter Saturation Voltage at I_C = 500 mA, I_B = 0.5 mA	$V_{BE(sat)}$	-	2	V
Base Emitter Turn-On Voltage at V_{CE} = 5 V, I_C = 50 mA	$V_{BE(on)}$	-	1.75	V
Output Capacitance at V_{CB} = 10 V, f = 1 MHz	C_{ob}	-	7	pF

Electrical Characteristics Curves

Fig. 1 Output Characteristics Curve

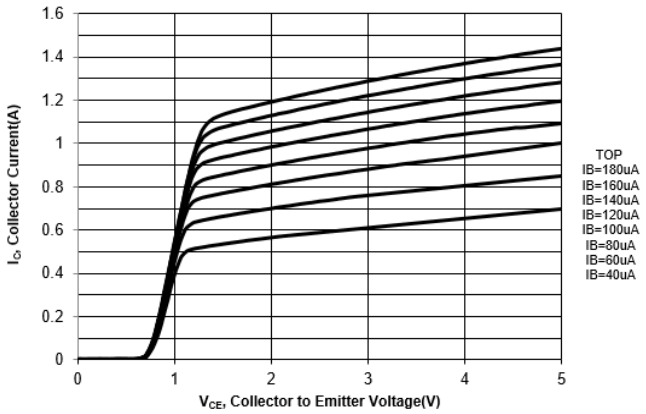

Fig. 2 Collector Current vs. Base to Emitter Voltage

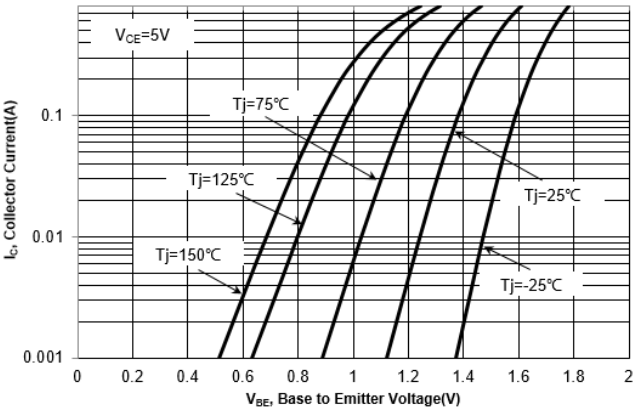

Fig. 3 DC Current Gain vs. Collector Current

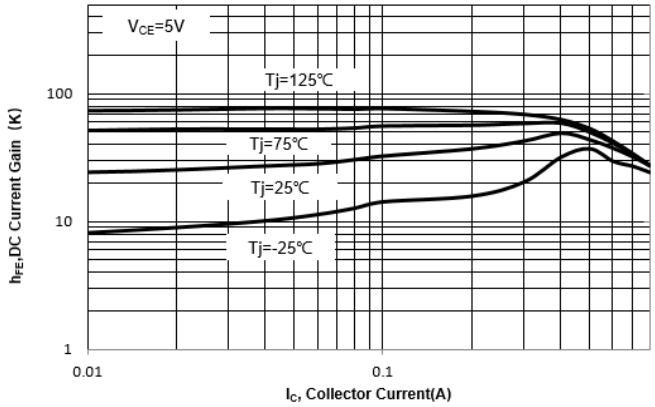

Fig. 4 V_{BESAT} vs. Collector Current

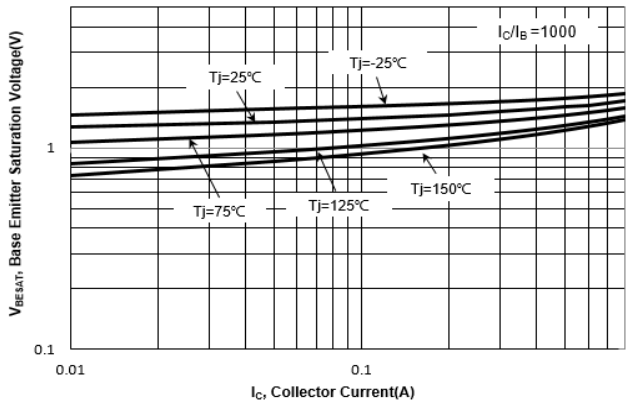

Electrical Characteristics Curves

Fig. 5 V_{CESAT} vs. Collector Current

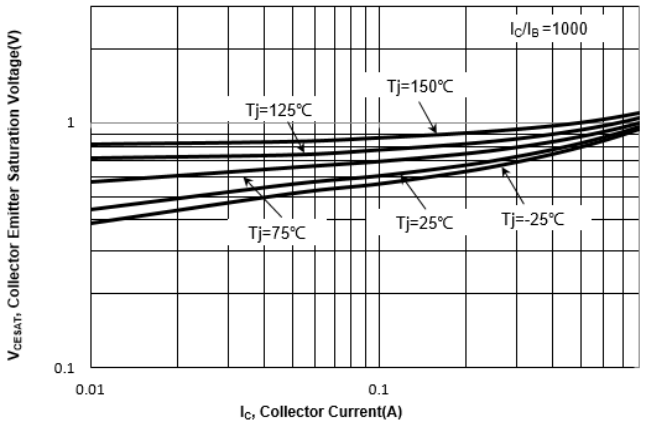

Fig. 6 Output Capacitance

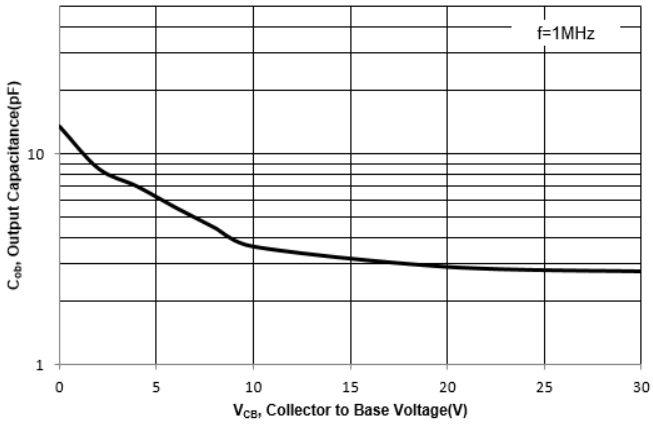

Fig. 7 Power Derating Curve

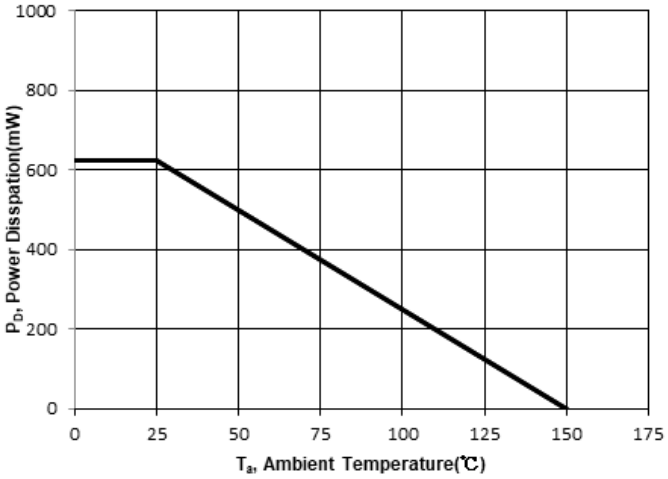

TO-92 Package Outline (Dimensions in millimeters)

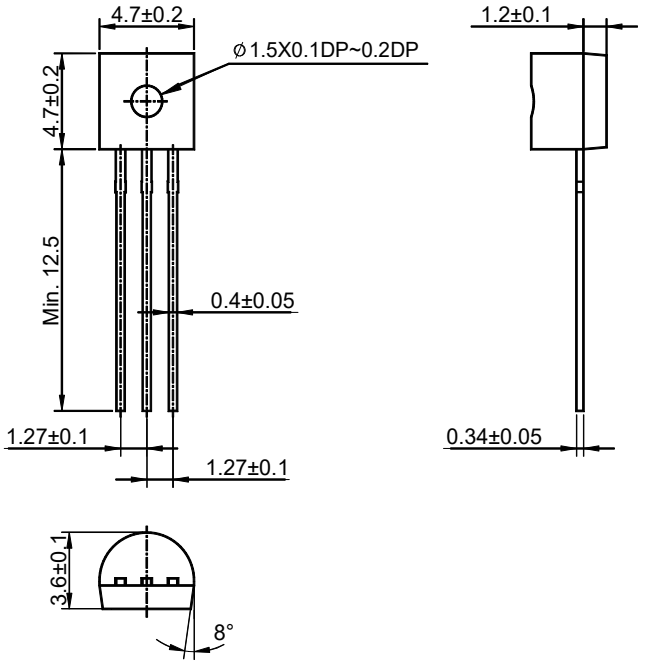

TO-92 Ammo-Pack Outline (Dimensions in millimeters)

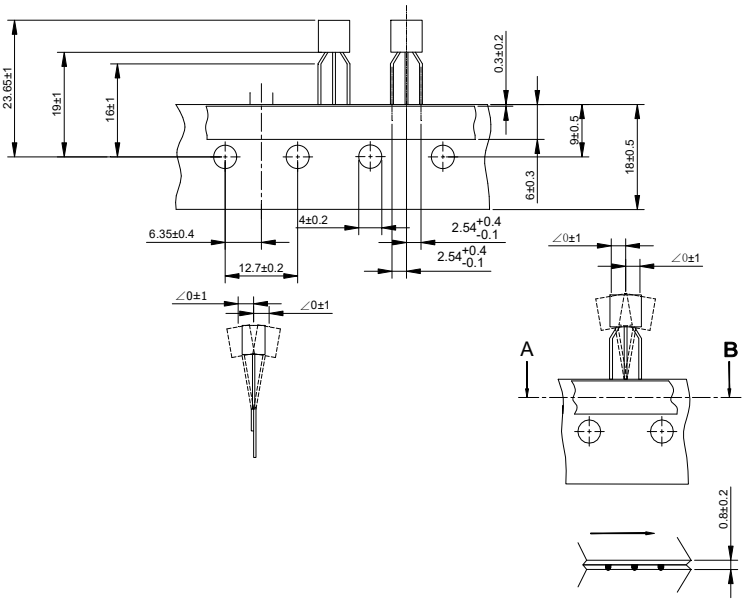

Packing information

Package	Bulk Packing			Ammo-Packing	
	Per Bag Qty	Per Box Qty	Per Carton Qty	Per Box Qty	Per Carton Qty
TO-92	1,000	5,000	50,000	4,000	20,000

Dated: 20/06/2023 Rev: 02